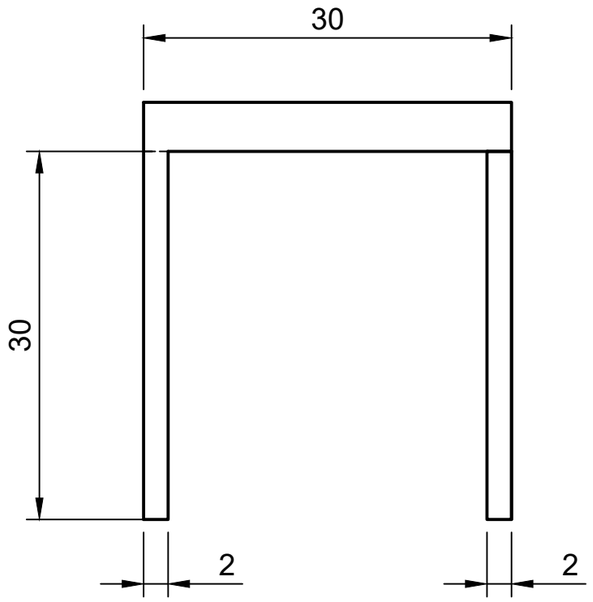

FRONT VIEW

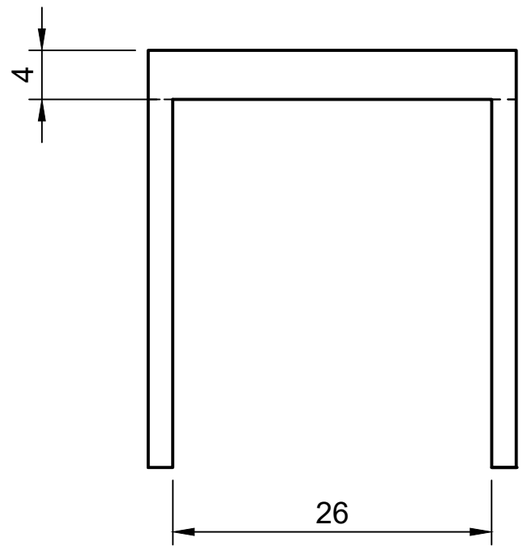

SIDE VIEW

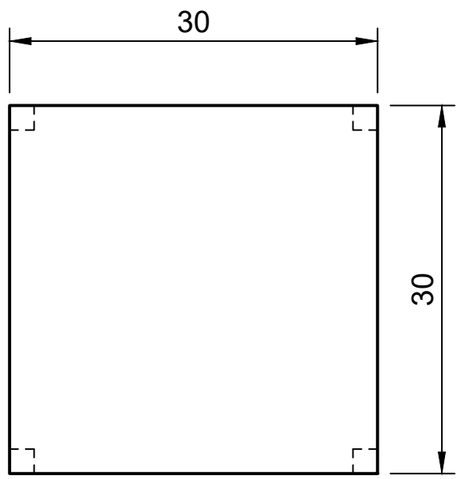

TOP VIEW

Parts List			
Item	Part Name	Material	Mass
1	EX NO:5.2 STOOL	Steel	32.028 g

Dept. IT	Technical reference 212225220086	Created by RITIKA S	Approved by Dr SARAVANAN MP
		Document type ORTHOGRAPHIC	Document status
		Title EX NO:5.2 STOOL	DWG No.
			Rev. 5.2 / Date of issue 18/03/2026 / Sheet 1/1